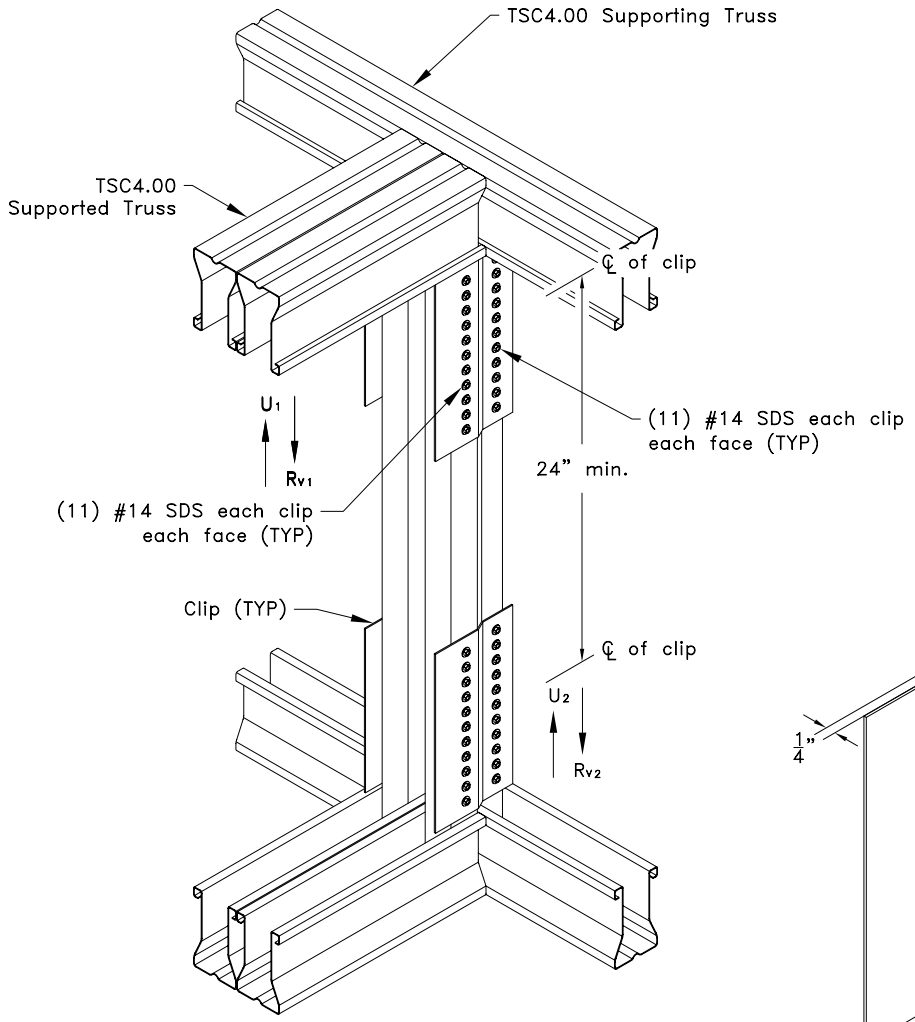

3-D View

$$R_v = R_{v1} + R_{v2}$$
$$U = U_1 + U_2$$

$$R_v = U = 9780\#$$

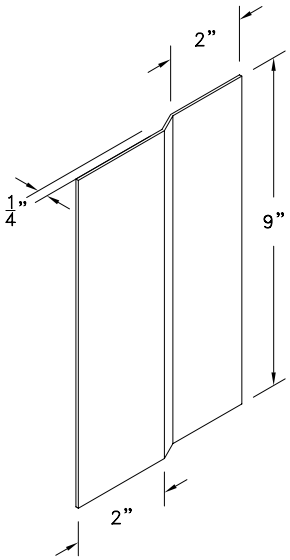

Clip

14g ASTM A653 SS Grade 33 Class 1 G60
Minimum bare metal thickness: t = 0.0677"

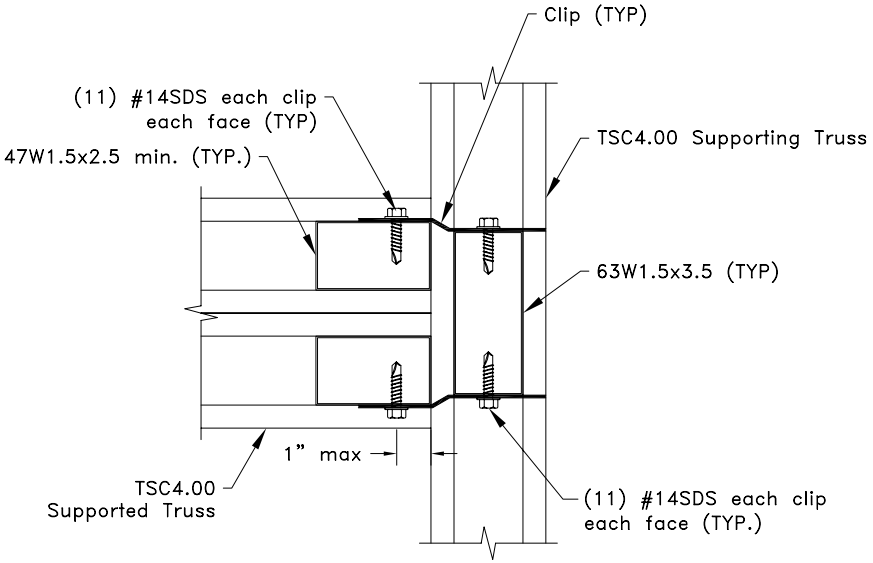

Plan View

General Notes:

1. SDS = Self-Drilling Tapping Screw
2. Edge distances, end distances, & spacing are 3/4" minimum.
3. Supported truss must be analyzed with clip type bearings located as shown.
4. Cold formed steel calculations are per the 2004 addendum to the AISI 2001 North American Specification for the Design of Cold-Formed Steel Structural Members.

TrusSteel® An ITW Company
www.TrusSteel.com
Florida: 1950 Marley Drive / Haines City, FL 33844 / (800) 755-6001
Missouri: 13389 Lakefront Drive / Earth City, MO 63045 / (800) 326-4102
California: 8351 Rovana Circle / Sacramento, CA 95828 / (800) 877-3678

90° Truss -to-Truss Connection

ITW Building Components Group, Inc. shall not be responsible for any performance failure in a connection due to a deviation from this detail. Any variation from this detail shall be approved in advance by ITW Building Components Group, Inc.

Custom Detail: TS-CD-TT-917-005

Date: 06/22/09

Custom Detail Category: Truss-to-Truss Connection